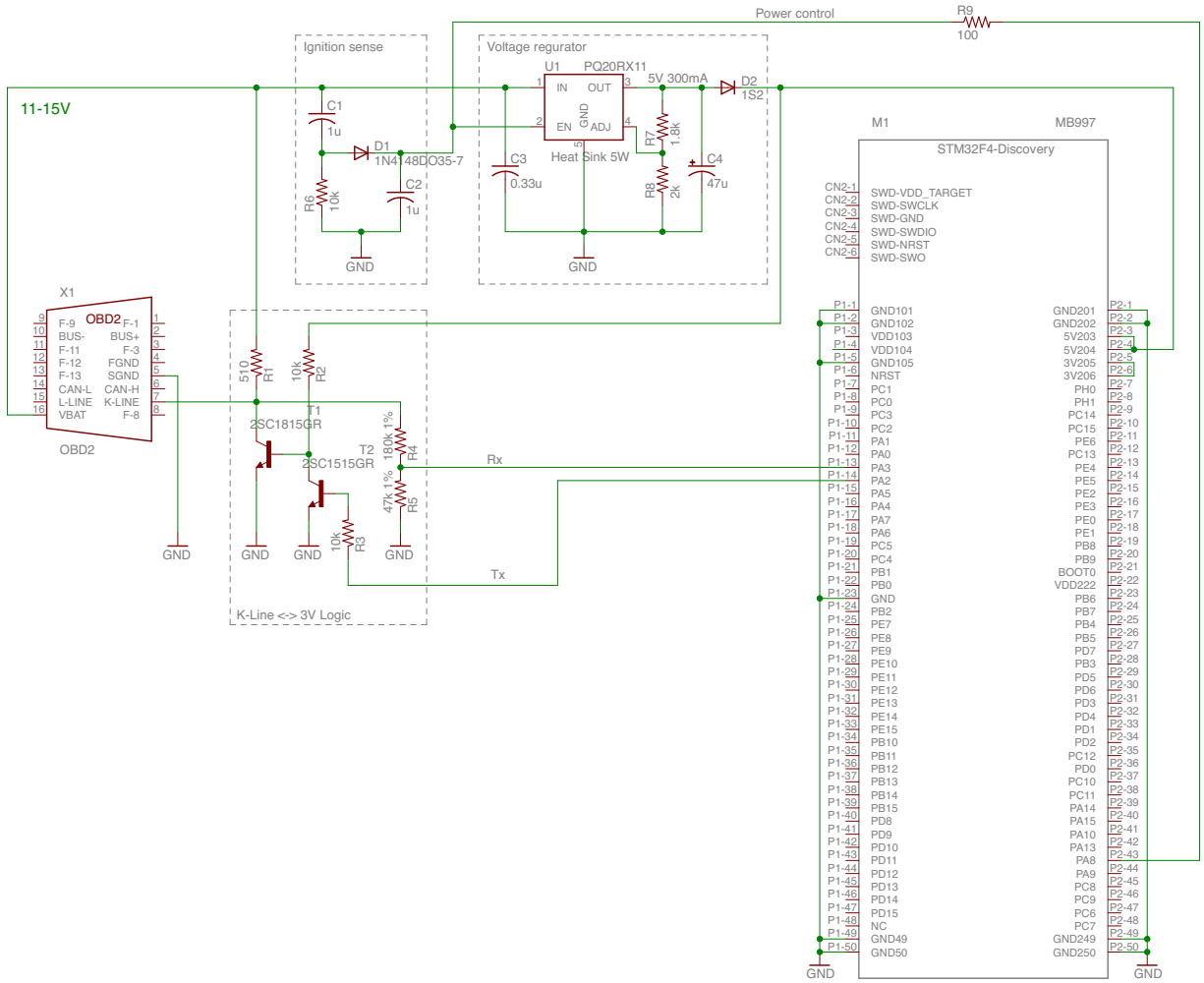

Vehcle Data Logger for HONDA ACTY TRUCK GBD-HA7 USB Bluetooth interface	HA7LoggerMini
	V0_4a
	13/05/07 16:45
(c)2013 Toyohiko Togashi	Sheet: 1/1