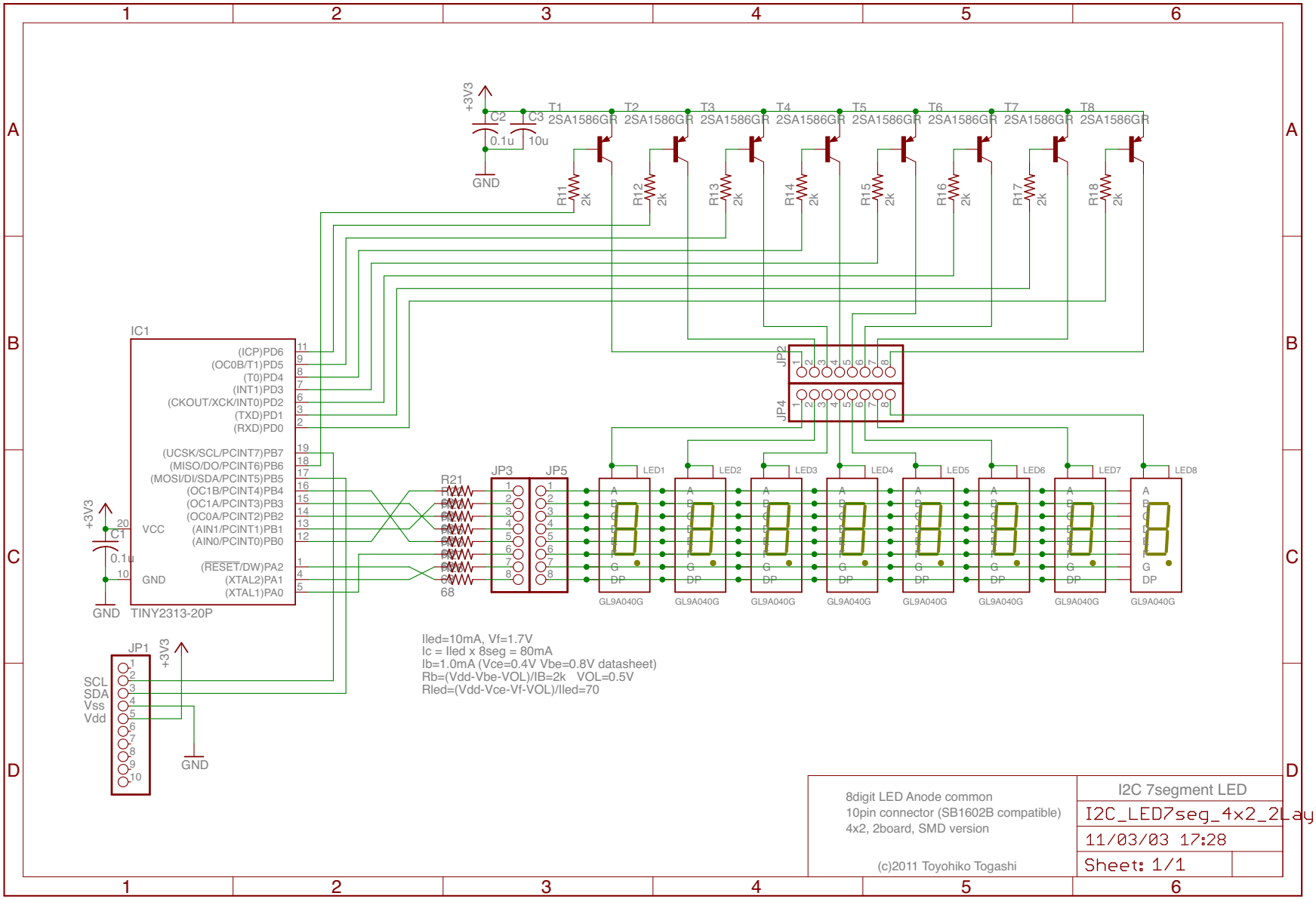
+3V3
C2
0.1u
C3
10u
GND
T1 2SA1586GR
T2 2SA1586GR
T3 2SA1586GR
T4 2SA1586GR
T5 2SA1586GR
T6 2SA1586GR
T7 2SA1586GR
T8 2SA1586GR
R11 2k
R12 2k
R13 2k
R14 2k
R15 2k
R16 2k
R17 2k
R18 2k
IC1
(ICP)PD6
(OC0B/T1)PD5
(T0)PD4
(INT1)PD3
(CKOUT/XCK/INT0)PD2
(TXD)PD1
(RXD)PD0
(UCSK/SCL/PCINT7)PB7
(MISO/DO/PCINT6)PB6
(MOSI/DI/SDA/PCINT5)PB5
(OC1B/PCINT4)PB4
(OC1A/PCINT3)PB3
(OC0A/PCINT2)PB2
(AIN1/PCINT1)PB1
(AIN0/PCINT0)PB0
(RESET/DW)PA2
(XTAL2)PA1
(XTAL1)PA0
VCC
GND
TINY2313-20P
C1
0.1u
JP2
JP4
JP3
JP5
R21
68
LED1
LED2
LED3
LED4
LED5
LED6
LED7
LED8
GL9A040G
JP1
SCL
SDA
Vss
Vdd
Iled=10mA, Vf=1.7V
Ic = Iled x 8seg = 80mA
Ib=1.0mA (Vce=0.4V Vbe=0.8V datasheet)
Rb=(Vdd-Vbe-VOL)/IB=2k VOL=0.5V
Rled=(Vdd-Vce-Vf-VOL)/Iled=70
8digit LED Anode common
10pin connector (SB1602B compatible)
4x2, 2board, SMD version
(c)2011 Toyohiko Togashi
I2C 7segment LED
I2C_LED7seg_4x2_2LayTrAnodeCommonSmd_R2
11/03/03 17:28
Sheet: 1/1